M. I. Burbelo, Dr. Sc(Eng), Prof.; A. V. Hadaiy; A. N. Kravets; M. V. Nikitenko

DINAMIC REACTIVE POWER COMPENSATION IN ELECTRIC DRIVE TRANSIENT MODE

The pager suggests the structural diagrams with the formulated low of control over the system of dynamic compensation for reactive power in disturbance, intended for the compensation of reactive power starting large asynchronous motors.

Key words: *compensation for reactive power, starting motors, disturbance control.*

Problem consideration

Operation of electric drives during their starting as well as under variable conditions is characterized by considerable consumption of reactive power, which in some cases exceeds the consumption of active power. Starting currents of powerful asynchronous motors (AM) stipulate for under voltage in the network node. This in turn, causes the reduction of node load stability. One of the efficient measures of improvement of voltage level in transient modes is fast (dynamic) compensation for reactive power.

Substantiation of the results

Let us consider two variants of realization of the systems of dynamic compensation for reactive power of electric drives with the usage of static thyristor compensation (STC) (fig 1), where: three-phase power supply (TPS), electric drive (ED), thyristor-regulated reactor, including reactors L_1, L_2, L_3 and switched subtractive-paralled-thyristors VT_{11}, VT_{12}, VT_{21}, VT_{22}, VT_{31}, VT_{32},, capacitors battery C_1, C_2, C_3. Controlling over STC is made with the help of the system of impulse-phase control (SIPC). Information on loading on its input enters from the outputs of measuring channels (MC), which, in turn, connected to the ED supply line through the current measuring transformers (CT) and voltage (VT).

The system of dynamic compensation for reactive power (fig. 1a) ensures the control on disturbance, and the system (fig. 1b) – on deviation. The system with the control on disturbance (fig. 1a) is characterized by more efficient processing speed, but its construction requires to choose informative parameters and to receive regulation curve of STS.

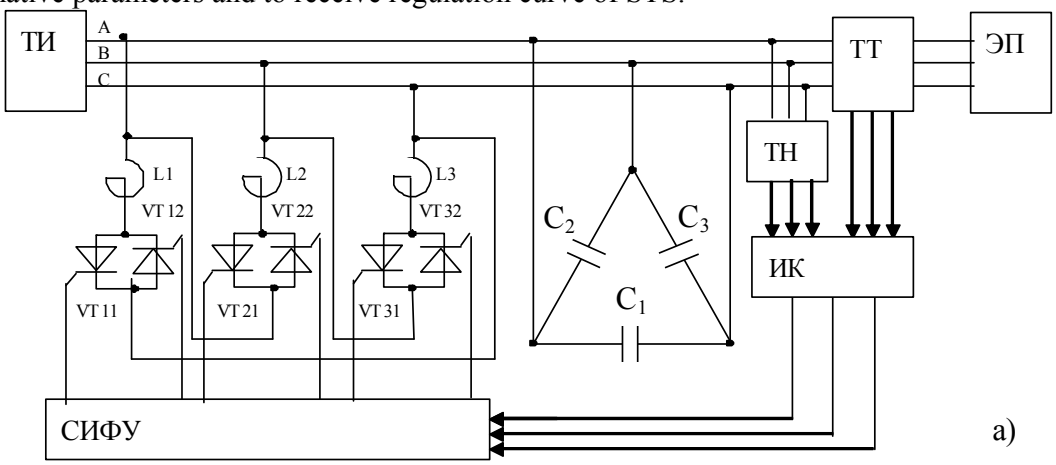

а)

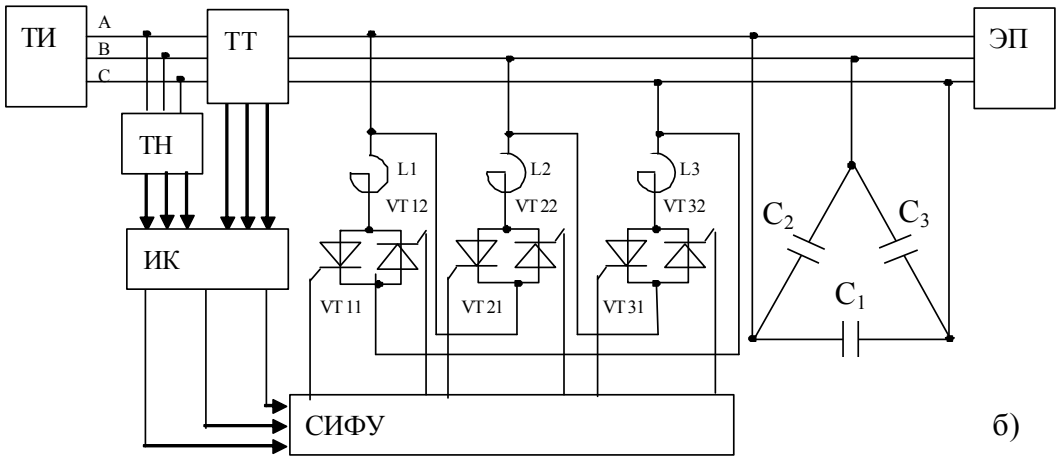

Fig.1. Diagram of dynamic compensation for reactive power of electric drives with the help of STC

Let us consider a question on choice of informative parameters for controlling over STC on disturbance. With an aim of analysis of energy processes during transient processes in electric drivers, [1-3] presents the notions of current meanings of active and reactive constituents of spectral resistance α conductivity.

$$R_C(t)=\frac{P(t)}{I^2(t)};\ \ X_C(t)=\frac{Q(t)}{I^2(t)};\ g_C(t)=\frac{P(t)}{U^2(t)};\ \ b_C(t)=\frac{Q(t)}{U^2(t)}, \tag{1}$$

as well as spectral conductivity, for determination of which there had been used the equivalency conditions between the constituents of spectral resistance and conductivity:

$$g_K(t)=\frac{R_C(t)}{R_C{}^2(t)+X_C{}^2(t)}\ ;\ \ b_K(t)=\frac{X_C(t)}{R_C{}^2(t)+X_C{}^2(t)}\,. \tag{2}$$

In case of controlling following the condition $b_K(t)=0$ the reactive power $Q_K(t)=b_K(t)U^2(t)$ is generated. Considering that $b_K(t)=\dfrac{Q(t)}{P^2(t)+Q^2(t)}I^2(t)$, we get

$$Q_K(t)=Q(t)\frac{S^2(t)}{P^2(t)+Q^2(t)}\ .$$

As under conditions of supply voltage nonsinusoidality or non-linearity in the magnetizing circuit AM $S^2(t)\geq P^2(t)+Q^2(t)$, the dynamic compensation for reactive power on criteria $b_K(t)=0$ ensures more efficient coverage in comparison with control on criteria $b_C(t)=0$: $Q_K(t)\geq Q(t)$. Electromagnetic torque of AM in conditions of nonsinusoidality decreases, that is why the application of this criteria leads to an increase of stability of loading node. At the same time, in conditions when supply voltage nonsinusoidality or non linearity of AM are insignificant. Both the criteria provide for equal level of compensation.

Let us switch over to the consideration of the STC regulation curve. In STC with the diagram of connecting the thyristor-regulated reactors (TRR) in „ triangle”, the current through the bithyristor key in each of the phases does not depend on the current in other phases. That is why the peculiarities and energetic characteristics of STC may be received considering one phase TRR [4, 5].

Each phase of the compensator includes the reactor with the inductivity L_p and active resistor R_p, and bithyristor key, the resistance of which equals zero. The expression for momentary current may be received by solving the differential equation

$$U_m \cdot cos(\omega t + \gamma) = i \cdot R_p + \omega L_p \frac{di}{d\omega t} \ , \tag{3}$$

where U_m – amplitude value of the linear net voltage; γ – angle of thyristors opening, which comes true for the current through the theristor in the interval $\gamma \le \omega t \le \gamma_в$, $\gamma_в$ – angle of thyristors closing, corresponding to the zero current value.

Solving the differential equation (3) considering the initial conditions $\omega t = \gamma$, $i = 0$, we get the expression for momentary current through TRR, which is true for the current through the thyristor in the interval $\gamma \le \omega t \le \gamma_в$:

$$i(\omega t) = I_m \cdot \left[cos(\omega t - \varphi) - cos(\gamma - \varphi) \cdot e^{-\frac{\omega t - \gamma}{\omega \tau_p}} \right] , \tag{4}$$

where $I_m = \dfrac{U_m}{\sqrt{R_p^2 + (\omega \cdot L_p)^2}}$ – current amplitude through the reactor when $\gamma = 0$;

$\varphi = arctg \dfrac{\omega L_p}{R_p}$ – phase shift angle of the main current harmonica through the reactor ;

$\tau_p = \dfrac{L_p}{R_p}$ – reactor time constant.

Since the TRR in the common case is mostly the inductive loading ($\varphi \approx 90^\circ$), the form of current in TRR when increasing the angle of switching on γ, calculating from the maximum value of linear voltage, decreases its amplitude without changing the phase shift practically (fig. 2). After switching the thyristor, the current through the TRR runs within the time interval which does not exceed the half period. Angle of thyristor closing $\gamma_в$ may be determined from the expression

$$cos(\gamma_в - \varphi) - cos(\gamma - \varphi) \cdot e^{-\frac{\gamma_в - \gamma}{\omega \tau_p}} = 0 ,$$

which is received from (4) under condition of $i = 0$ when $\omega t = \gamma_в$.

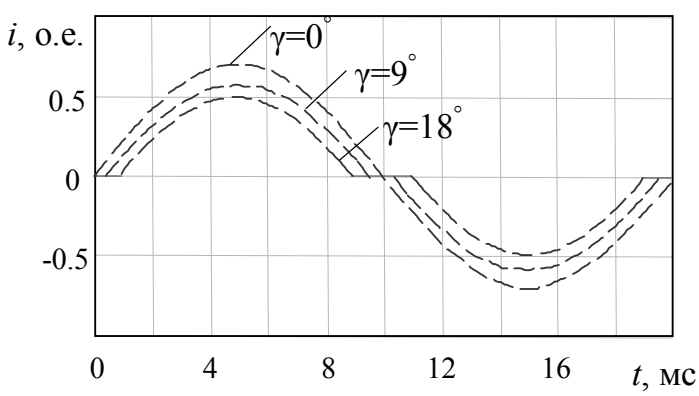

Fig. 2. TRR current dependences in the function of angle γ

To receive the regulation curve Qstc(γ) lets consider the analytical dependences for the current TRR, which has the reactive character. The dependence of amplitude current value TRR on angle γ may be received from the expression (4), substituting $\omega t = \varphi$:

$$I_m(\gamma) = I_m(0) \cdot \left[1 - cos(\gamma - \varphi) \cdot e^{-\frac{\varphi - \gamma}{\omega \tau_p}} \right]. \quad (5)$$

Dependence $I_m(\gamma)$ presented in Fig. 3 (curve1). For the comparison this figure presents the experimentally taken dependence of the amplitude of the first harmonica $\widetilde{I}_{1m}(\gamma)$ of the current TRR (curve 2). Dependence of the amplitude of the first harmonica $\widetilde{I}_{1m}(\gamma)$ (curve 2) of the current TRR is much more lower in comparison with the theoretical dependence of the amplitude value of the non sinusoidal current $I_m(\gamma)$ (curve1), which can be explained by the availability of the higher harmonics.

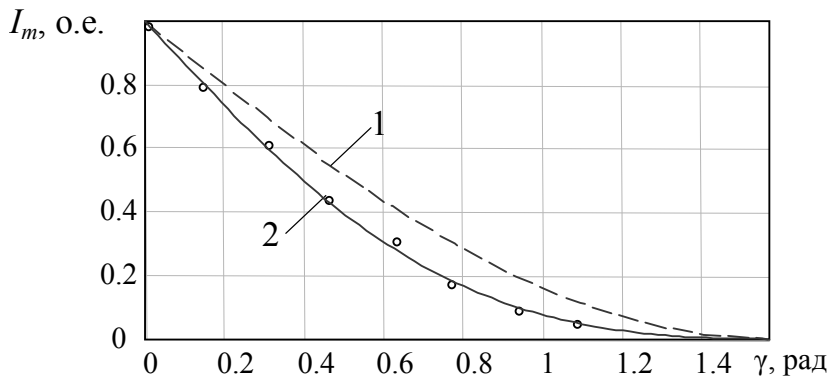

Fig. 3. Dependence of amplitude values of no sinusoidal current (curve 1) and its first harmonica (curve 2) through TRR

The table presents the experimental data of the current amplitude values TRR $\widetilde{I}_m(\gamma)$, which slightly differ from the theoretical $I_m(\gamma)$. It also presents the experimental data of the amplitude values of the first harmonica of the current TRR $\widetilde{I}_{1m}(\gamma)$, as well as higher harmonics $\widetilde{I}_{\nu m}(\gamma)$, of the reactive character.

Table

Data of the amplitude values of the current through the TRR

γ	0°	9°	18°	27°	36°	45°	54°	63°
$I_m(\gamma)$	1	0,844	0,692	0,548	0,414	0,295	0,193	0,110
$\widetilde{I}_m(\gamma)$	1	0,839	0,693	0,538	0,405	0,293	0,186	0,107
$\widetilde{I}_{1m}(\gamma)$	0,986	0,790	0,604	0,436	0,293	0,179	0,096	0,042
$\widetilde{I}_{3m}(\gamma)$	0	-0,065	-0,113	-0,136	-0,131	-0,105	-0,069	-0,035
$\widetilde{I}_{5m}(\gamma)$	0	-0,036	-0,051	-0,037	-0,006	0,021	-0,031	-0,024
$\widetilde{I}_{7m}(\gamma)$	0	-0,024	-0,021	0,002	0,020	0,015	-0,002	-0,012
$\widetilde{I}_{9m}(\gamma)$	0	-0,016	-0,005	0,013	0,008	-0,007	-0,009	0,002
$\widetilde{I}_{11m}(\gamma)$	0	-0,011	0,003	0,009	-0,005	-0,006	0,005	0,003
$\widetilde{I}_{13m}(\gamma)$	0	-0,001	0,006	0,001	-0,006	0,004	0,002	-0,004

Data analysis shows that angle increase γ decreases the reactive current of the main harmonica TRR. At the same time, angle increase γ causes the current reactive constituents on the higher harmonicas. The amplitude value of the third current harmonica is the highest and reaches its maximum with the angle of $\gamma \approx 30^\circ$. However, considering, that the third current harmonica is closed in the triangle TRR, the influence of the higher harmonic component will be less considerable, since the amplitude of the fifth harmonica makes up 5,1 % of the main harmonica with the angle of 18°, and the amplitude of the seventh harmonica does not increase 2,4 %.

Since the highest harmonicas of feeding voltage equal zero, the reactive power is not consumed on them. That is why the reactive power will be determined by the reactive constituent of the main current harmonica

$$Q = U \cdot I_1 \cdot sin\varphi_1 = U \cdot I_{1p}.$$

Analytical dependence of the amplitude values of the main current harmonica $I_{1m}(\gamma)$, with the reactive character, may be received from the expression for current (4), factorising it in Fourier series [6]

$$I_{1m}(\gamma) \approx \frac{I_m(0)}{\pi} \cdot \left[(\pi - 2\gamma) - sin(\pi - 2\gamma)\right].$$

So, the regulating curve of the TPS reactive power may be presented as

$$Q_{CTK}(\gamma) = F(\gamma) = Q_{KУ} - Q(\gamma) = Q_{KУ} - \frac{Q(\gamma = 0)}{\pi} \cdot \left[(\pi - 2\gamma) - sin(\pi - 2\gamma)\right].$$

Thus, the law of TPS control for the system of dynamic compensation of the reactive power on the disturbance (fig. 1a) may be presented as :

$$\begin{aligned} &Q_{CTK}(t) = b_C(t)U^2(t); \\ &\gamma(t) = F^{-1}(Q_{CTK}(t)). \end{aligned} \tag{6}$$

For the realization of the inverse non linear dependence F^{-1} it is possible to use the functional generator.

Conclusions

There had been suggested the structural diagrams of the systems of dynamic compensation of the reactive power on disturbance and on deviation. There had been formulated the law of control of the system of dynamic compensation of reactive power on disturbance.

REFERENCES

1. Бурбело М.Й. Підвищення ефективності електроспоживання асинхронних двигунів у перехідних режимах / М.Й. Бурбело, А.В. Гадай // Енергетика та електрифікація. – 2008. – № 3. – С. 57 – 58.

2. Бурбело М.Й. Компенсація реактивної потужності асинхронних двигунів в різкозмінних режимах навантаження / М.Й. Бурбело, А.В. Гадай // Вісник Вінницького політехнічного інституту. – 2008. – № 1. – С. 65 – 68.

3. Бурбело М.Й. Аналіз асинхронних двигунів в перехідних режимах з використанням спектральних параметрів / М.Й. Бурбело, А.В. Гадай // Вісник Кременчуцького державного політехнічного університету. – 2008. – Вип. 4 (51), ч. 1. – С. 150 – 154.

4. Пєтухов М.В. Дослідження математичної моделі параметричного статичного компенсатора реактивної потужності / М.В. Пєтухов, А.В. Гадай, Ю.В. Грицюк // Вісник НУ „Львівська політехніка”. Електроенергетичні та електромеханічні системи. 2001. – № 421. – С. 154 – 159.

5. Пєтухов М.В. Інтегральні показники енергетичного процесу тиристорних компенсаторів реактивної потужності при їх живлені від мережі обмеженої потужності / М.В.Пєтухов, Ю.В. Грицюк, А.В. Гадай // Вісник Приазовського державного технічного університету. – Маріуполь: ПДТУ, 2005. – С. 100 – 104.

6. Статические компенсаторы для регулирования реактивной мощности / Под ред. Р.М. Матура. – М.: Энергоатомиздат, 1987. – 160 с.

Mykhailo Burbelo – head of department of electrotechnical systems of electric consumption and energetical management.
Vinnytsia National Technical University.

Andriy Hadaiy – assistant with the department of electric power supply in Lutsk National Technical university.
Lutsk National Technical University.

Olexandr Kravets – assistant with the department of electrotechnical systems of electric consumption and energy management.

Maksym Nikitenko – student of the Institute of electric energy and electro mechanics
Vinnytsia National Technical University.