V. S. Osadchuk, Dc. Sc. (Eng.); O. V. Osadchuk, Dc. Sc. (Eng.);O. M. Ilchenko

MICROELECTRONIC OPTICAL TRANSDUCER FOR LIQUID LEVEL MEASUREMENT

The possibility of converting optical power based on autogeneration device, which consists of transistor structures with negative resistance, and where the photosensitive element is a photodiode. Analytical dependencies of voltage-current characteristics and transformation functions that can be used for engineering calculations of parameters of optic power transducers are obtained .

***Key words**: photodiode, optical radiation, fluid level, impedance, transistor structure with negative resistance, mathematical model.*

Introduction

Almost 70% of all measurements performed in science, industry and agrarian sector are connected – with the measurements of pressure, cost, quantity and level of substance. Measurement of liquid level is a key issue of environmental control. Selection of the device for liquid level measurement depends primarily on its properties, storage conditions and environmental parameters [1].

At present various schemes intended to detect liquid level are elaborated. Sensors of non optical type, such as conventional assembly systems are also widely used, but they are relatively expensive, complex for assembly, and have other drawbacks. Optical sensors have advantages over non –optical ones. Optical sensors do not require electrical contact with the investigated liquid. Thus, optical sensors with relatively simple structure can be manufactured [2]. The current state- of- art in information-measuring engineering is characterized by a great variety of methods for converting values of power of optical radiation into electrical signal. Presentation of information parameter in analog form requires analog-to -digital converters, cost of which, due to high requirements regarding accuracy, is equivalent to the cost of micro-computers. In the systems for liquid level measurement high accuracy can be achieved using optical sensors based on transistor structures with negative resistance of the output frequency signal [3]. These converters are characterized by high noise immunity, simplicity and high accuracy of conversion into digital code, as well as convenience of commutation in multichannel measuring systems [4, 5].

Hence, for using these advantages there is a necessity in the development of frequency converters of optical radiation.

Problems set up of the research

To determine the optical properties of the frequency converter it is necessary to develop a mathematical model on the basis of which you can obtain the dependence of active and reactive component of structure resistance on the power of optical radiation and derive the conversion function of optical converter used in the system of liquid level measurement. These issues are considered in the article.

Mathematical model

The diagram of frequency converter based on bipolar and field – effect transistors is shown in Fig. 1. Photosensitive element of the scheme is photodiode scheme.

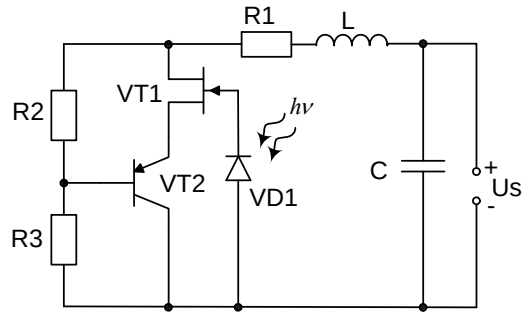

Fig. 1. Scheme of microelectronic optical transducer with photodiodes

Field-effect and bipolar transistors VT1 and VT2 realize radio-frequency amplifier in which the oscillatory circuit is formed by a capacitive component of a complete resistance on the collector-drain electrodes of field-effect and bipolar transistors and passive inductance L.

Determination of voltage- current characteristics (VCC) photo-converter is an essential issue, since operating point is chosen on this characteristic that causes self-excitation and stability of operation of radio-frequency amplifier of the transducer. To determine VCC of the converter direct current equivalent circuit is considered (Fig. 2).

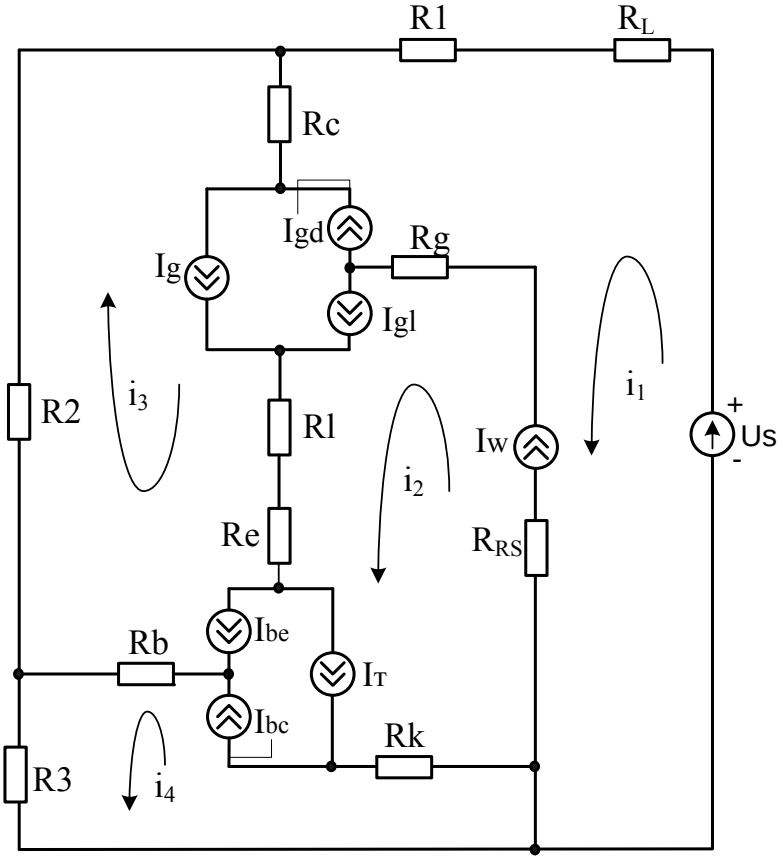

Fig. 2. Equivalent circuit of direct current converter

Determination of analytical dependence of VCC will provide an opportunity to prove the existence of negative resistance, which corresponds to descending section of VCC.

Equivalent circuit elements are described by such quantities: Rb – base resistance; Rc resistance of collector transition; Re emitter resistance transition; Rg – shutter electrode ohmic resistance – resistance; Rd – drain p-n junction resistance; Rl resistance of drain p-n junction; RRS – diode base resistance; R2, R3- divider resistances; RL-inductance resistance of oscillatory circuit; Ibc – base-

collector current; Ibe- base-emitter current; Igd – gate-drain current; Igl- gate-leakage current. Kirchhoff equation, according to the directions of selected contour current have the form:

$$\begin{cases} U_s = (R_1 + R_L + R_c + R_{RS})(i_1 - I_w - I_{gd} - I_g + I_{gl}) + R_c(i_3 + I_{gd} + I_g - I_{gl} + I_{be} - I_T - I_{bc}) + \\ + (R_g + R_{RS})(-i_2 - I_w - I_{gd} + I_g - I_{gl} + I_{be} - I_T - I_{bc}) \\ 0 = (R_g + R_l + R_e + R_c + R_{RS})(i_2 + I_w - I_{gd} - I_g + I_{gl} - I_{be} + I_T + I_{bc}) + \\ + (Rg + R_{RS})(-i_1 + I_w + I_{gd} + I_g - I_{gl}) + (R_l + R_e)(i_3 + I_{gd} + I_g - I_{gl} + I_{be} - I_T - I_{bc}) + \\ + R_c(-i_4 + I_{be} - I_T - I_{bc}) \\ 0 = (R_2 + R_c + R_l + R_e + R_b)(i_3 + I_{gd} + I_g - I_{gl} + I_{be} - I_T - I_{bc}) + \\ + (R_l + R_e)(i_2 + I_w - I_{gd} - I_g + I_{gl} - I_{be} + I_T + I_{bc}) + R_c(i_1 - I_w - I_{gd} - I_g + I_{gl}) + \\ + R_b(i_4 - I_{be} + I_T + I_{bc}) \\ 0 = (R_3 + R_b + R_c)(i_4 - I_{be} + I_T + I_{bc}) + R_b(i_3 + I_{gd} + I_g - I_{gl} + I_{be} - I_T - I_{bc}) + \\ R_c(-i_2 - I_w + I_{gd} + I_g - I_{gl} + I_{be} - I_T - I_{bc}) \end{cases} \quad (1)$$

The system of equations (1) we solve applying the Gauss method by means of Matlab 5.2. package Parameters of equivalent circuit of the converter needed to calculate VCC characteristics are taken from [6]. Fig. 3 presents theoretical and experimental VCC characteristic of the given converter.

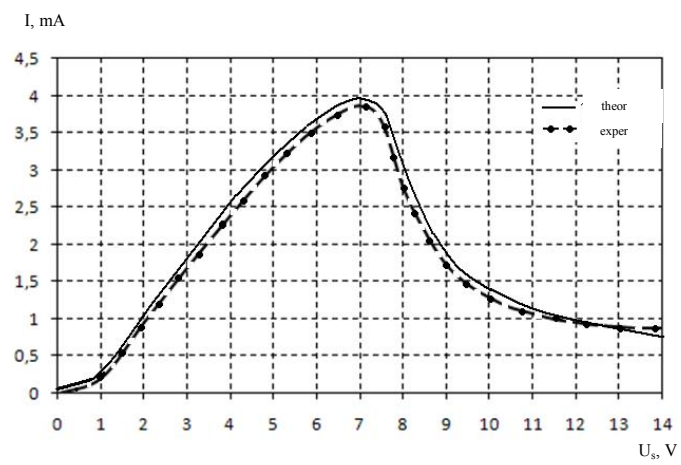

Fig 3. Theoretical and experimental VCC of optical frequency converter based on bipolar and field -effect transistors

The dependence shows that negative resistance section is in the range from 7.1 to 14 V of supply voltage. Experimental device is presented in Fig. 4. For experimental studies hybrid microcircuit of transistor structure with negative resistance was manufactured. In hybrid integrated circuits crystals 2N3906 of bipolar transistor 2N3906 and field- effect transistor KP303 were used.

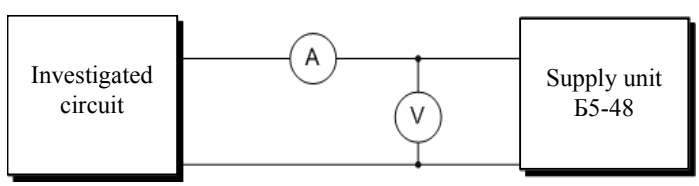

Fig. 4. Block diagram of measurement unit for obtaining VC C

Transfer function is defined on the basis of equivalent circuits (Fig. 5) with calculation of the impedance on the electrodes of stick-collector of the converter the diagram of which is presented in Fig. 1. The equivalent circuit (Fig. 5) is modified into more suitable for the calculation (Fig. 6).

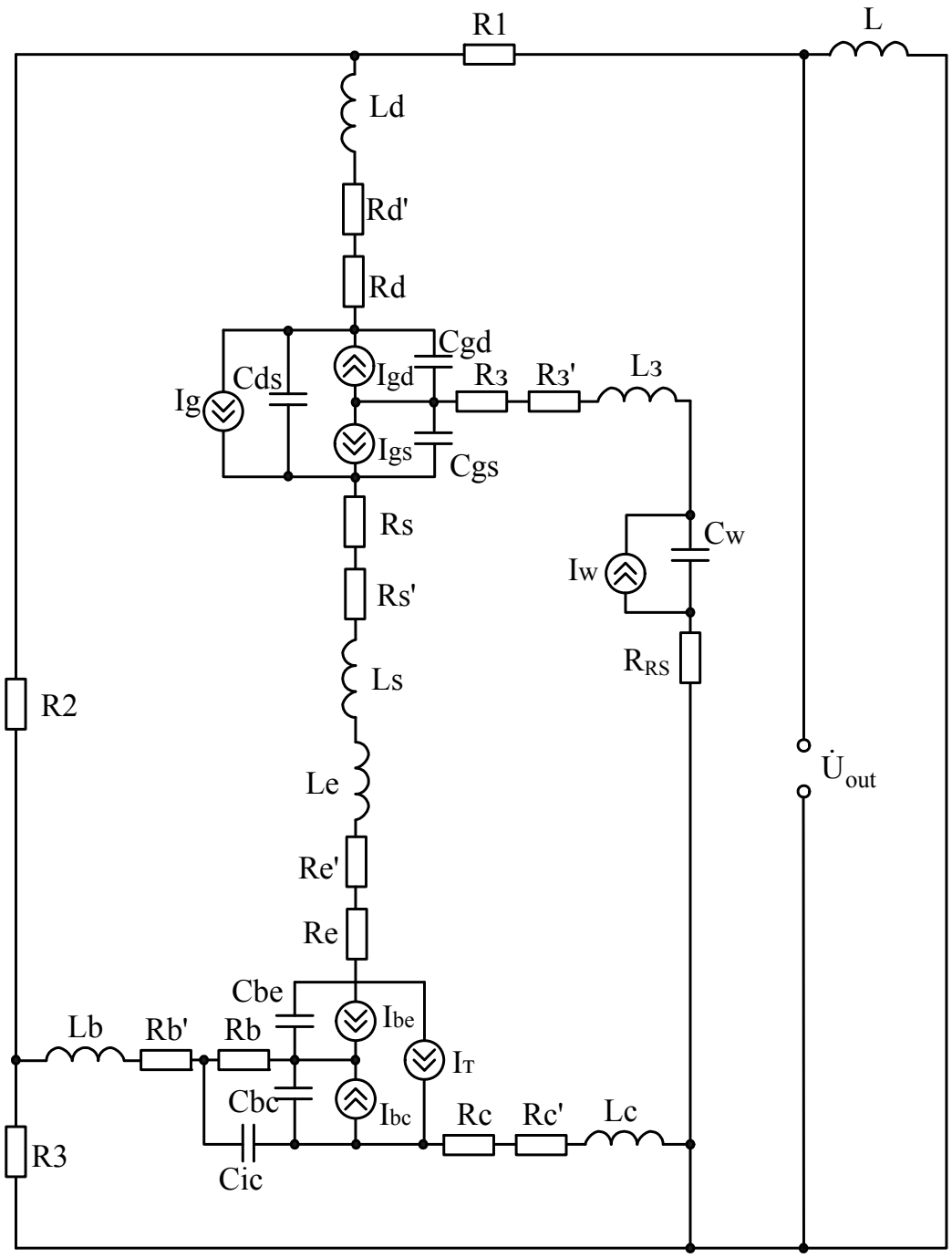

Fig. 5. Equivalent circuit of AC optical converter

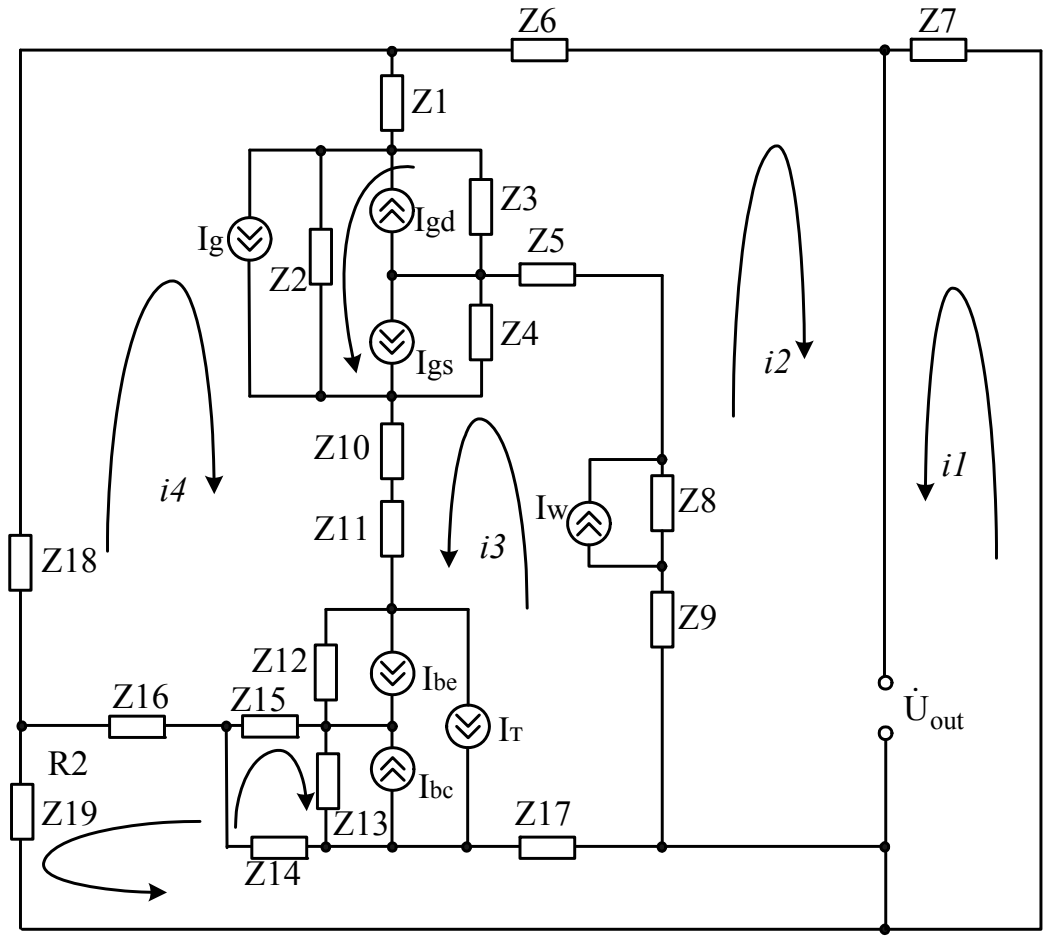

Fig. 6. Modified equivalent circuit of AC optical transducer

The system of Kirchhoff equations for AC has the form:

$$\begin{cases} \dot{U}_{out} = Z_7 \cdot i_1 \\ \dot{U}_{out} = (Z_6 + Z_9 + Z_8 + Z_5 + Z_3 + Z_1)i_2 - Z_1 i_4 + (Z_5 + Z_8 + Z_9)i_3 + Z_3(-I_{gd} + I_{gs} + I_g) + \\ + Z_3 i_7 - Z_8 I_w \\ 0 = (Z_5 + Z_4 + Z_{10} + Z_{11} + Z_{12} + Z_{13} + Z_{17} + Z_9 + Z_8)i_3 + (Z_5 + Z_8 + Z_9)i_2 + \\ + (Z_{10} + Z_{11} + Z_{12})i_4 + Z_{13} i_6 - Z_{17} i_5 + Z_4(I_{gd} - I_{gs} - I_g) - Z_4 i_7 - Z_8 I_w + \\ + Z_{12}(-I_{be} + I_{bc} - I_T) + Z_{13}(-I_{be} + I_{bc} - I_T) \\ 0 = (Z_1 + Z_2 + Z_{10} + Z_{11} + Z_{12} + Z_{15} + Z_{16} + Z_{18})i_4 + Z_2 i_7 + Z_2(I_{gd} - I_{gs} + I_g) + \\ + (Z_{10} + Z_{11} + Z_{12})i_3 + Z_{12}(-I_{be} + I_{bc} - I_T) - Z_{15} i_6 + Z_{16} i_5 \\ 0 = (Z_{16} + Z_{19} + Z_{17} + Z_{14})i_5 + Z_{16} i_4 - Z_{17} i_3 + Z_{14} i_6 \\ 0 = (Z_{13} + Z_{14} + Z_{15})i_6 + Z_{13} i_3 + Z_{13}(-I_{be} + I_{bc} - I_T) + Z_{14} i_5 - Z_{15} i_4 \\ 0 = (Z_2 + Z_4 + Z_3)i_7 + Z_2 i_4 - Z_4 i_3 + Z_3 i_2 + Z_2(I_{gd} - I_{gs} - I_g) + Z_4(-I_{gd} + I_{gs} + I_g) + \\ + Z_3(I_{gs} - I_{gd} + I_g), \end{cases} \quad (2)$$

where $Z_1 = (R_d + R'_d) + j\omega L_d, Z_2 = -j/(\omega C_{ds}), Z_3 = -j/(\omega C_{gd}), Z_4 = -j/(\omega C_{gs}),$
$Z_5 = (R_g + R'_g) + j\omega L_g$, $Z_6 = R_1$, $Z_7 = j\omega L$, $Z_8 = -j/(\omega C_w)$, $Z_9 = R_{RS}$,

$Z_{10} = (R_s + R'_s) + j\omega L_s$, $Z_{11} = (R_e + R'_e) + j\omega L_e$, $Z_{12} = -j/(\omega C_{be})$, $Z_{13} = -j/(\omega C_{bc})$,
$Z_{14} = -j/(\omega C_{ic})$, $Z_{15} = R_b$, $Z_8 = -\mathrm{j}/(\omega \mathrm{C_w})$, $Z_{16} = R'_b + j\omega L_b$, $Z_{17} = (R_c + R'_c) + j\omega L_c$,
$\mathrm{Z_{15} = R_2}$, $\mathrm{Z_{19} = R_3}$,

where R'_b, R'_e, R'_c – ohmic resistance of the base, emitter and collector junctions, respectively; L_b, L_e, L_c – inductance of base, emitter and collector junctions respectively;

L_g, L_d, L_s – inductance of electrode, gate, source , drain; C_{be}, C_{bc} – capacitance of emitter and collector junctions; C_{ic} – input capacitance of VT2 transistor; C_{gd}, C_{gs}, C_{ds} – gate-drain capacitance, gate-source, drain-source capacitance.

The system of equations (2) is solved using package Matlab 5.2, that enabled to get the impedance value, the active component of which is negative and reactive component is of capacitance nature. Dependencies capacitive reactive component of the impedance on optical power value are defined as

$$X_C = -j/(\omega C_{eq}),$$

where ω – resonant frequency of oscillatory circuit, which depends on the value of power of optical radiation; C_{eq} – equivalent capacitance of the converter, which is determined from equations (2).

Experimental device for obtaining transfer functions is shown in Fig. 7. Research were conducted using transistors of 2N3906 and KP303 types, photodiode with wavelength of 940 nm, capacitor of 470 nF, 1 kOhm resistors (R1), 100 kOhm (R2), 20 kOhm (R3), passive inductance of 100 μH.

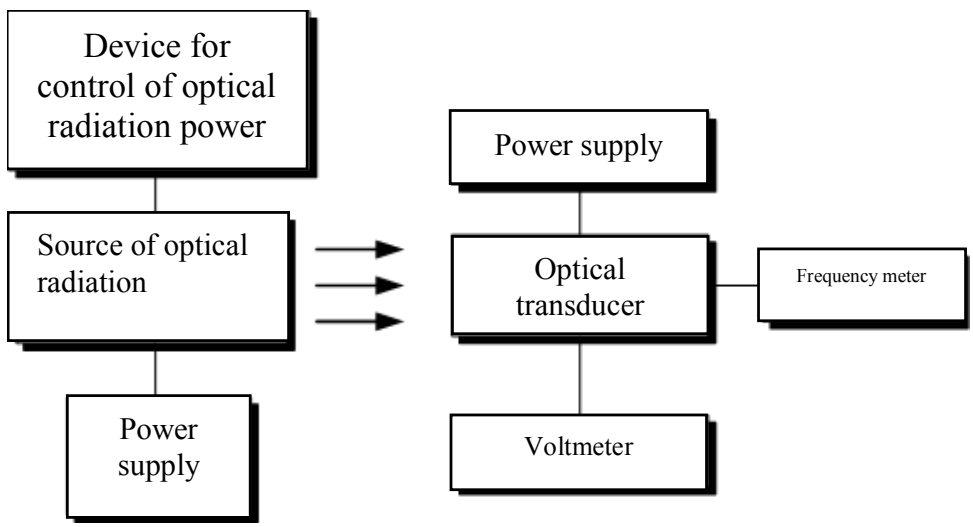

Fig. 7. Block diagram of measuring unit for investigation of dependence of transducer generation frequency generation on optical radiation

Fig. 8 shows theoretical and experimental dependences of the active component on supply voltage for different values of optical radiation power. From the graph it is seen that this dependence is almost linear on the section from 11.5 V to 13 V (20 mkVt / cm2) and from 11 V to 13 V (147 mkVt / cm2). And with increase of optical radiation power the active component decreases.

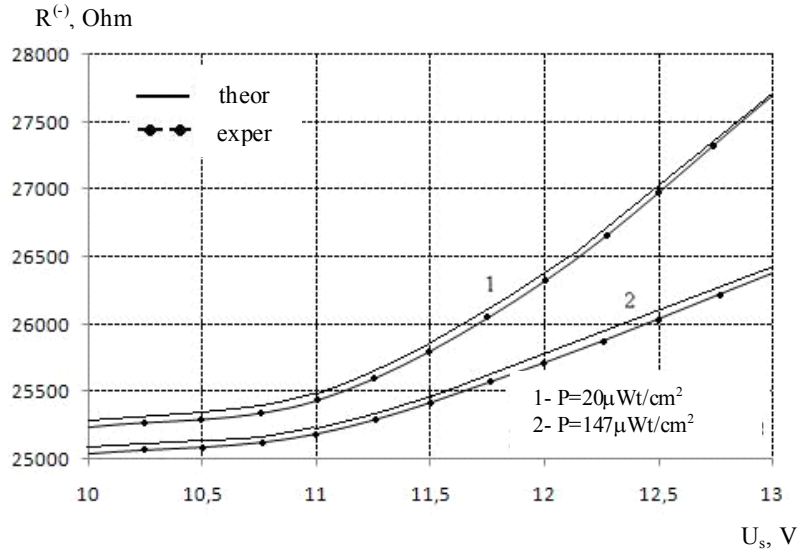

Fig. 8. Theoretical and experimental dependences of active component of the impedance on supply voltage

Fig. 9 shows theoretical and experimental dependences of capacitive reactive component on supply voltage. The graph shows that capacitive reactive component increases, at P = 20 mW / cm^2 from 10 to 11.5V this growth is more obvious. Analysis of curves progress shows that with increase of optical radiation power capacitive reactive component decreases (at U = 11.5 V by 10 ohms).

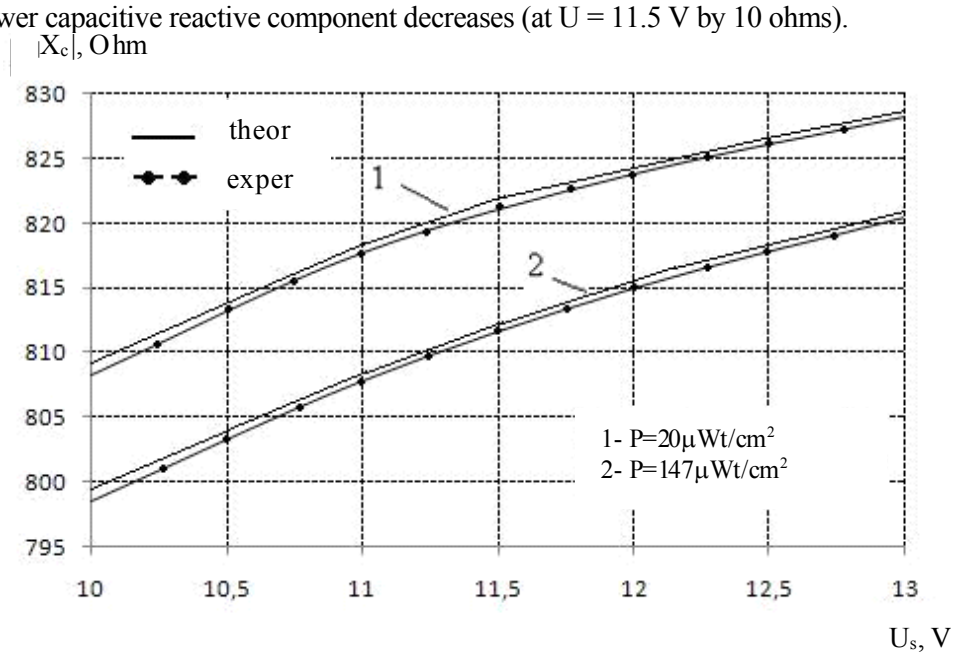

Fig. 9. Theoretical and experimental dependences of capacitive reactive component of the impedance on supply voltage

Fig. 10 shows the dependence of generation frequency on supply voltage for different powers of optical radiation. It is seen that generation frequency increases with increase of supply voltage.

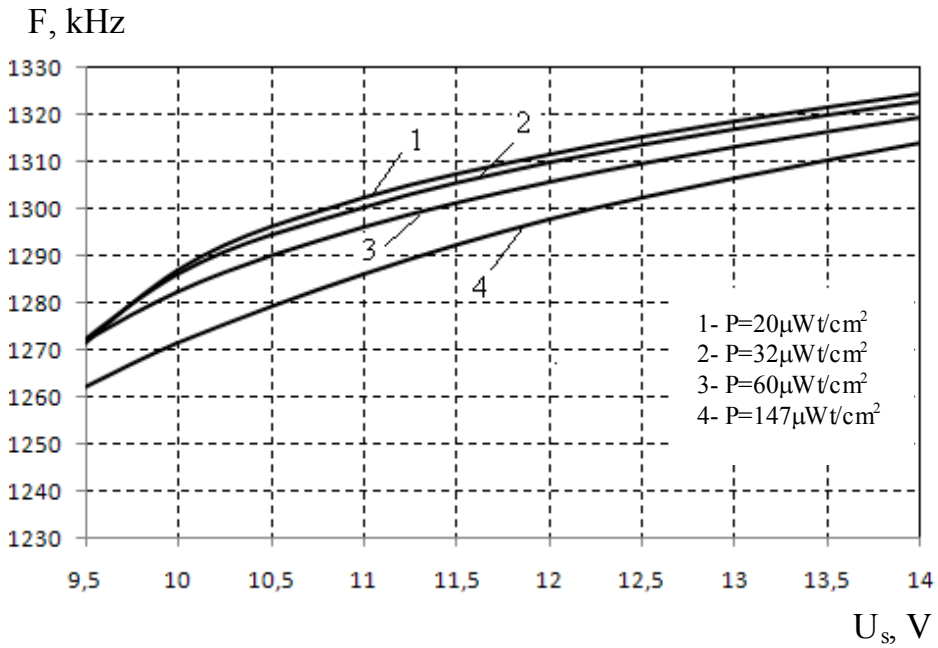

Fig. 10. Experimental dependence of generation frequency on supply voltage at different powers of optical radiation

Fig. 11 shows theoretical and experimental dependences of generation frequency on optical radiation power. As it is seen from the graph, the best dependence for transfer function can be obtained if the supply voltage is 10 V. In this case this dependence is almost linear. Also Fig. 11 shows that the generation frequency changes greater in the range from 20 to 50 mW / cm^2, and in the range from 50 to 150 mW / cm^2 it changes almost linearly. The discrepancy of theoretical and experimental data does not exceed ± 5 %.

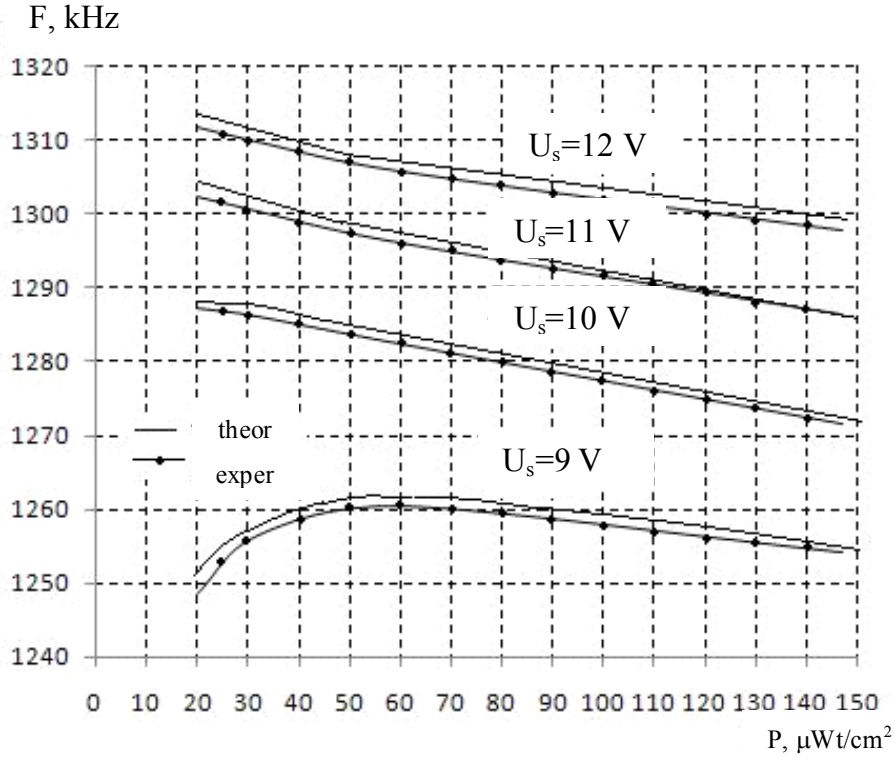

Fig. 11. Theoretical and experimental dependence of generation frequency on optical radiation power at different supply voltages

Dependence of power generation frequency on optical radiation power was determined by contour of feedback current according to equivalent circuit (Fig. 5). In this case the transfer function is defined by the expression:

$$F = \frac{1}{2\pi}\sqrt{\frac{C_w(P)\cdot C_{gs} + C_w(P)\cdot C_{ds} + C_{ds}\cdot C_{gs}}{L\cdot C_w(P)\cdot C_{ds}\cdot C_{gs}}} \qquad (3)$$

The sensitivity of the transducer is determined from expression (3) and is described by the equation:

$$S_P^F = \frac{1}{4}\frac{\dfrac{(C_{gs}+C_{ds})\cdot\left(\dfrac{\partial}{\partial P}C_w(P)\right)}{L\cdot C_w(P)\cdot C_{ds}\cdot C_{gs}} - \dfrac{\left(C_w(P)\cdot C_{gs} + C_w(P)\cdot C_{ds} + C_{ds}\cdot C_{gs}\right)\cdot\left(\dfrac{\partial}{\partial P}C_w(P)\right)}{L\cdot C_w(P)^2\cdot C_{ds}\cdot C_{gs}}}{\pi\sqrt{\dfrac{C_w(P)\cdot C_{gs} + C_w(P)\cdot C_{ds} + C_{ds}\cdot C_{gs}}{L\cdot C_w(P)\cdot C_{ds}\cdot C_{gs}}}} \qquad (4)$$

Fig. 12 shows the dependence of sensitivity of optical transducer on power of optical radiation.

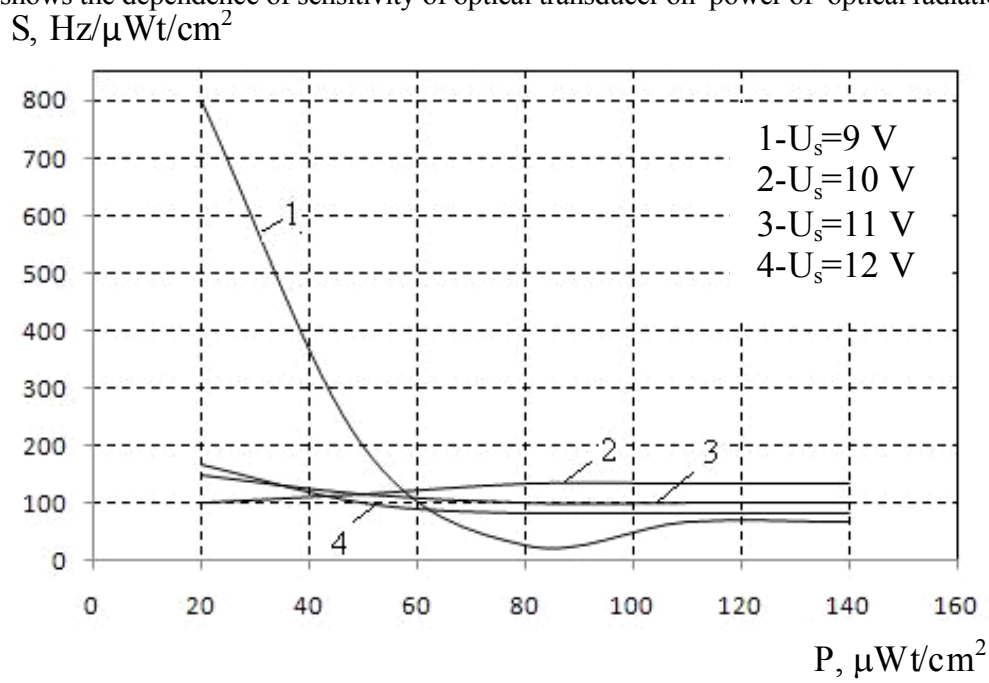

Fig. 12. Dependence of the sensitivity of optical frequency transducer on the power of optical radiation

As it is seen from the graph, the sensitivity of the device is 100 – 800 Hz/mW/cm^2. Maximum sensitivity of the optical frequency transducer is at supply voltage of 9 V.

Conclusions

Mathematical model of frequency transducer based on self-excited oscillator with bipolar and field-effect transistors is elaborated. Analytical expressions of VCC, transfer function and sensitivity equations are obtained . Theoretical and experimental dependences showed that the sensitivity of the developed device is 100 – 800 Hz/mW/cm^2. Maximum sensitivity of optical frequency transducer is obtained if it supply voltage is 9 V.

REFERENCES

1. Хансуваров К. И. Техника измерения давления, расхода, количества и уровня жидкости, газа и пара: учебное пособие для техникумов / К. И. Хансуваров, В. Г. Цейтлин – М.: Издательство стандартов, 1990. – 287 с.

2. Патент США № 7161165B2, МПК5 G01F 23/292. Optical transducer for continuously determining liquid level/ Alvin R. Wirthlin. – № 10/886174; Заявл. 07.07.2004; Опубл. 09.01.2007.

3. Осадчук А. В. Фоточувствительные преобразователи на основе структур с отрицательным сопротивлением: моногр. / А. В. Осадчук – Винница: Континент, 1998. – 130 с.

4. Новицкий П. В. Цифровые приборы с частотными датчиками. / Новицкий П. В., Кноринг В. Г., Гутников В. С. – Л.: Энергия, 1970. – 424 с.

5. Осадчук О. В. Мікроелектронні частотні перетворювачі на основі транзисторних стурктур з від'ємним опором. / О. В. Осадчук – Вінниця: УНІВЕРСУМ-Вінниця, 2000. – 302 с.

6. Разевиг В. Д. Применение програм P-CAD и PSPICE для схемотехнического моделирования на ПЭВМ. Выпуск 2. Модели компонент аналоговых устройств / В. Д. Разевиг. – М.: Радио и связь, 1992. – 72 с.

Volodymyr Osadchuk – Dc. Sc. (Eng), Professor with Department of Electronics, tel.: (0432)-598013.

Osadchuk Volodymyrovych – Dc. Sc. (Eng,), Professor, Head of Department of Radioengineering**.**

Olena Ilchenko – Post-Graduate, Department of Electronics, e-mail.: *alenail_86@mail.ru*, тел.: (0432)-688911

Vinnytsia National Technical University.